Tunable LED Sport Light

Date:---------- Location: ----------

Product:----------Project:----------

Quantity:----------Catalog#----------



FEATURES

- Tunable 300/400/500w design,IP65, 10KV surge protection.
- Robust aluminum housing, easy access wire, slip filter optional
- 30/40/60deg angle Select, LED Driver easy take off and remote
- 50,000 hours lifetime, DLC PREMIUM.

SUITABLE APPLICATIONS

- Sport fields.
- Square plaza lighting
- Sea Port lighting
- Airport lighting
- High mast and Contour lighting

CONSTRUCTION:

Heavy die-cast aluminum alloy housing with black powder-coated finish. Aluminum reflector cup and Anti-UV lens.

ELECTRICAL:

Available as 100-277V or 480V input. -40°C to 45°C.

OPTICAL SYSTEM:

High brightness Lumileds2835.
default 30deg, 30/40/60° angle select.

INSTALLATION&MOUNTING:

Angle-adjustable U bracket by mounting heights 30 to 60ft
Slip fitter mounts available.

WARRANTY:

5-year limited warranty.Actual performance may differ as a result of end-user environment and application.

PERFORMANCE

Model NO	Power Factor	Wattage	Voltage/Current Input		Light Efficiency	CCT Options
			120V	277V		
AST-SP17-500BA1A1 -BHV10SPFMWA50	0.92	300/400/500W	2.5/3.33/4.16A	1.08/1.44/1.8A	151W/LM	5000K

Features

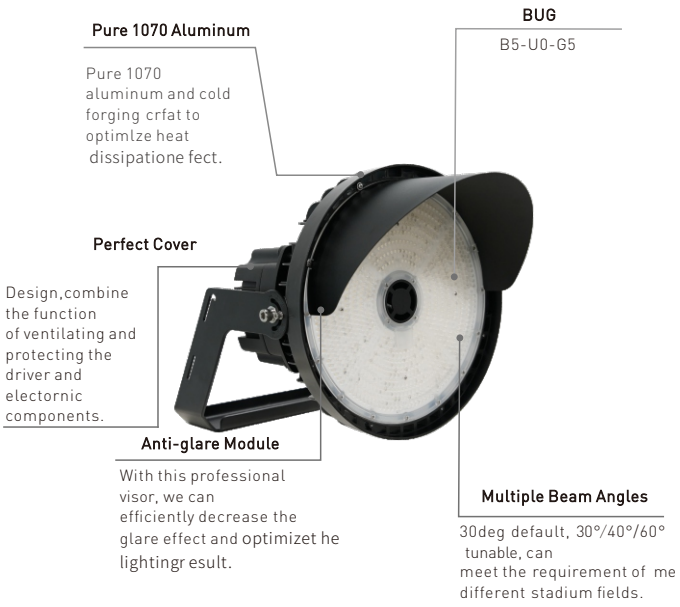

Electric Characteristic

Specification/Mode	AST-SP17-500BA1A1-BHV10SPFMWA50
LED Driver	SOSEN
Input power	300/400/500W
Lumens output	45300/60400/75500LM
Efficiency	151LM/W
CRI	＞72
Color Temperature	5000K
Inputvoltage	100-277V/AC
Light distribution type	30/40/60D
Working temperature	-40+45℃
Junction temperature	＜75℃
lamps efficiency	≥90%
Certificate	UL CUL DLC
Equivalent	1200-2000W MH/HPS

DIMENSION

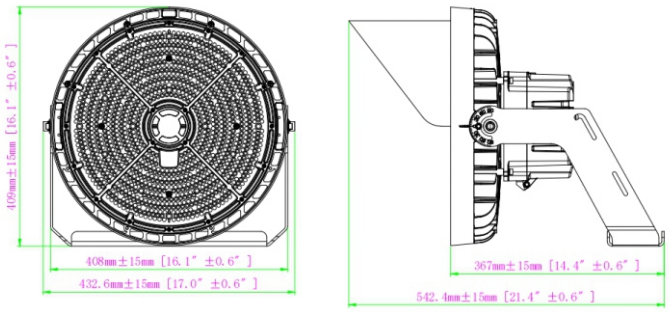

DISTRIBUTION DIAGRAM

AST-SP17-500BA1A1-BHV10SPFMWA50

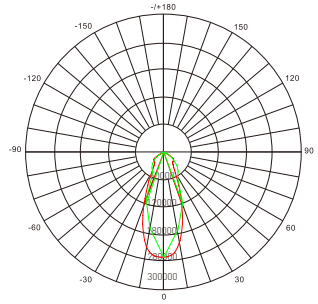

AVERAGE BEAM ANGLE(50%):40°

UNIT:CD

Lumens:75500LM
Test Number:500W
Test Number:5000K

C0/180,37.2
C30/210,35.6.1
C60/240,37..6
C90/270,40.9

Installation of LED Lamps:

1. Mark the hole distance "S " shown in the product to be installed.(Figure 1)
2. Drill two holes of distance "S " on the mounting bar .(Figure 2)

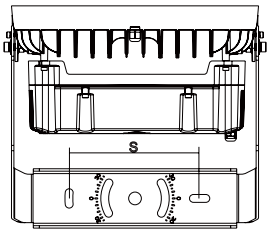

POWER	S
400-500W	216MM/8-1/2"
600-750W	216MM/8-1/2"

Figure 1

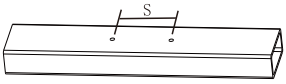

Figure 2

3. Install the luminaire on the crossbar and secure it with nuts, spring washers and flat washers . (Figure 3)
4. Use an open-end wrench and hex wrench to loosen the adjustment screw used to adjust the angle.(Figure 4)

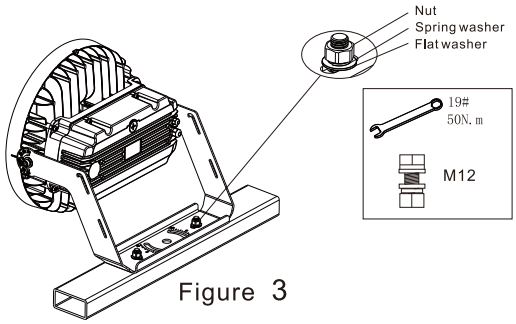

Figure 3

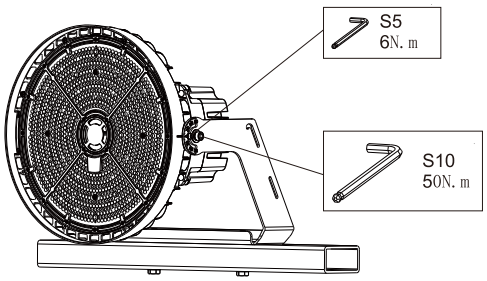

Figure 4

5.According to the need, adjust the projection angle, angle adjustment range . (Figure 5)
6. Complete the projection angle adjustment and lock the adjustment screw.
7.According to the previous wiring diagram and select one desired method for wiring.

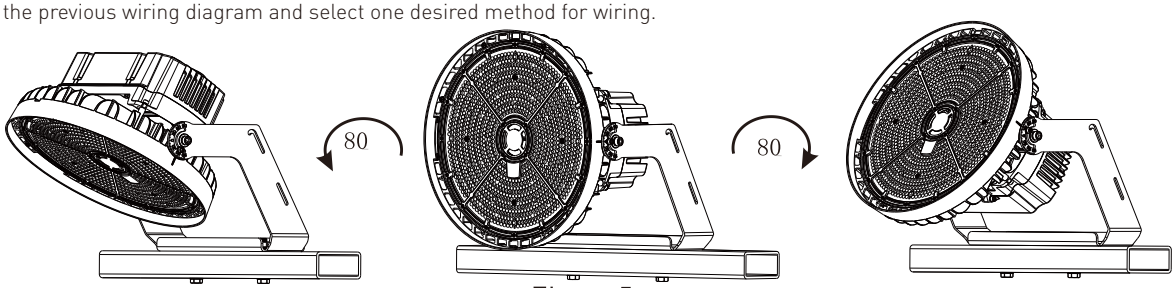

Figure 5

Installation method two (Yoke Mount): FM
1. Set the up/down orientation by loosening the (2) bolts in the knuckle of the Universal Mount and turning the knuckle then retorque the bolts. (Figure 6)

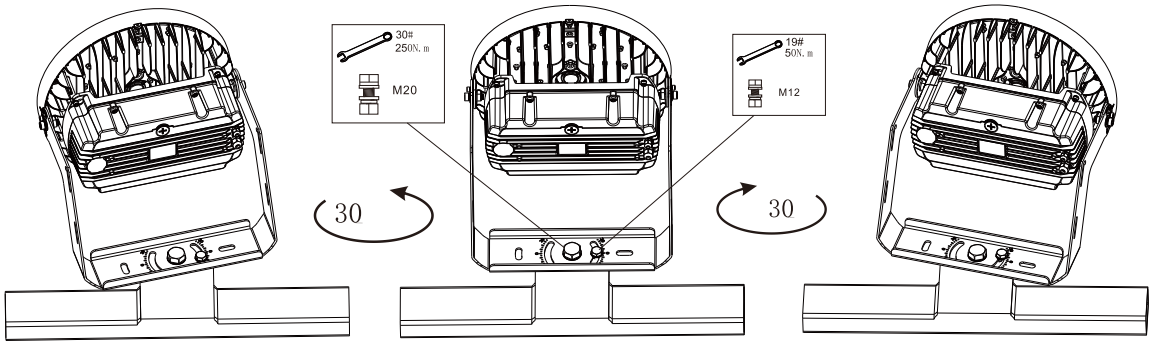

Figure 6

2. Use an open-end wrench and hex wrench to loosen the adjusting screw for adjusting the angle . (Figure 7)

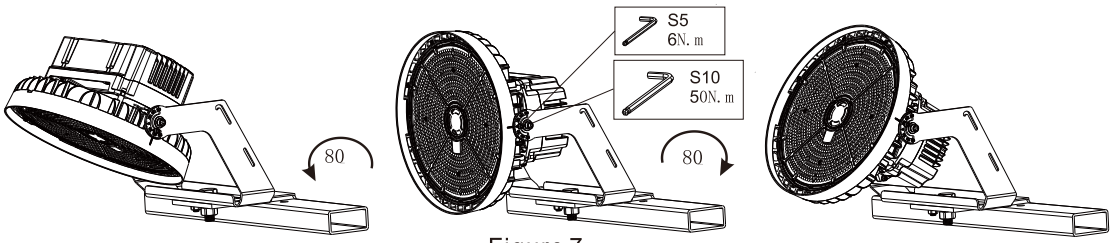

Figure 7

Instructions for Visor

When the light shield function is requird,Fix the light barrier to the luminaire with a screwdriver as required.(Figure 8)

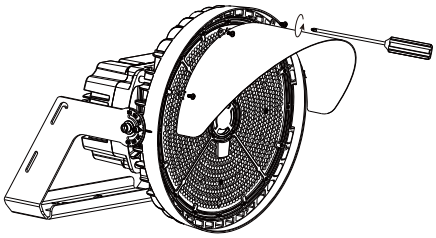

Figure 8

Instructions for ZHAGA device

ALWAYS TURN OFF THE POWER SUPPLY FROM MAIN CIRCUIT BREAKER FIRST!

ZHAGA device Socket and sealing cap are installed on the side of the fixture.To install ZHAGAdevice,first turn, loosen and remove the the socket.Then, install and tighten ZHAGA device in the socket. If the ZHAGA device is notneeded, remove the device, and install and tighten sealing cap in the socket.(Figure 9)

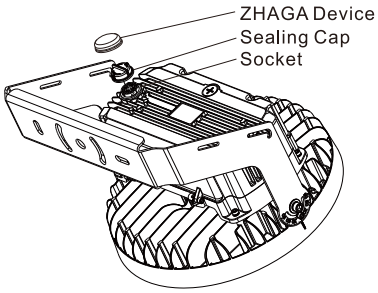

Figure 9

The explanation for beam angle and wattage Adjustable :

The light fixture with wattage adjustable function,tear off the plug,switch it to the tap position you need.(Figure 10)

Beam angle adjustable of all models:30°,40°,60° , Factory setting: 40° ;
Wattage adjustable of
500W model:300W,400W,500W,Factory setting:"500W

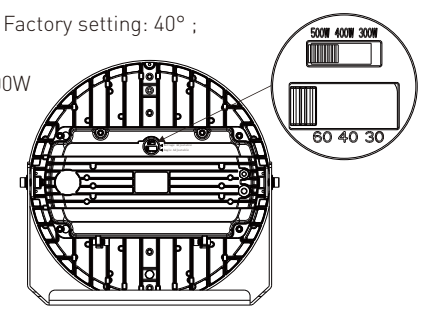

Figure 10