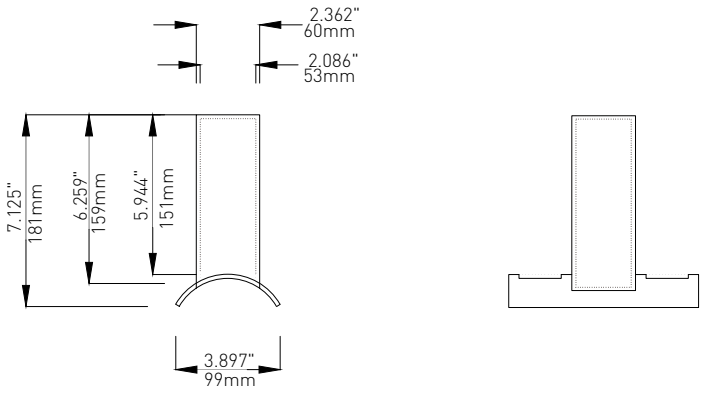

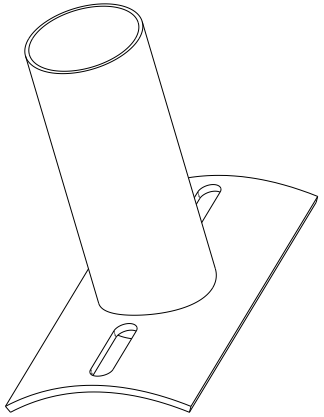

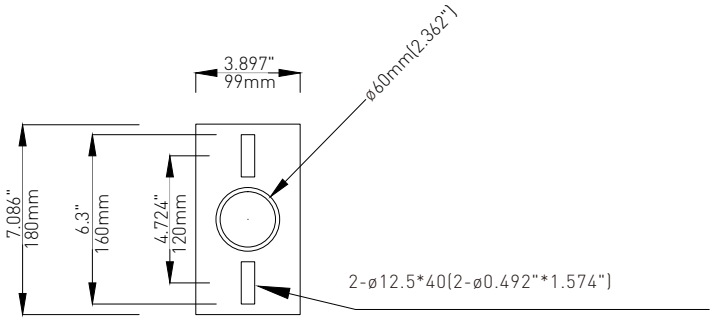

Material Nane:RPA01

Specificat ionDeseription

Technical requirements:
1.Q235# steel, processed according to the drawing, without 0.02" chamfer.
2, If no dimensions are specified, refer to the 3D diagram.
3.No tolerance is specified according to the ordinary tolerance table.
4,hot dip zine external surface spray outdoor powder, color according to customer requirements, in line with RolS standards.