Date:..... Location: .....

Product:..... Project:.....

Quantity:..... Catalog#.....

New Construction Plate for Commercial Downlight





New Construction Plate for Commercial Downlights is fabricated from galvanized iron. It supports 4 cutout sizes and accommodates downlights up to 10 inches. Suitable for both new construction joist mounting and T-Grid installations.

Model	CD-MF01	Dimension	23.7"*12.3"*0.6"/ 603*312.7*14.2mm
Installation method	Recessed	Package size	24.4"*11.4"*13"/ 620*290*330mm(6PCS)
Suitable for light type	4/6/8/10 inch downlight	Material	Galvanized iron
Open Hole size	Φ 4 21/64" | Φ 6 1/2" | Φ 8 7/64" | Φ 9 1/16"	N.W.	1265g ± 50g

Diagrammatic sketch

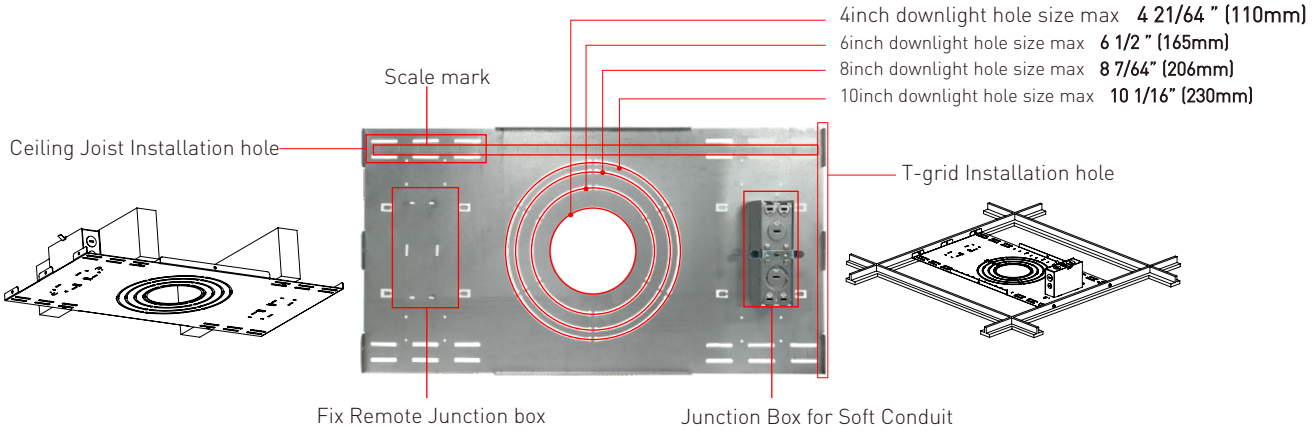

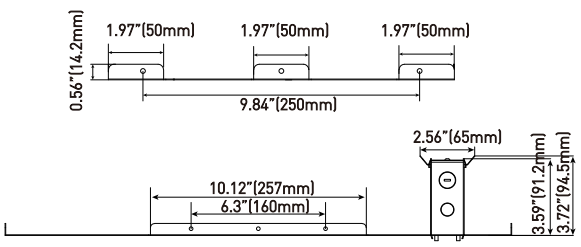

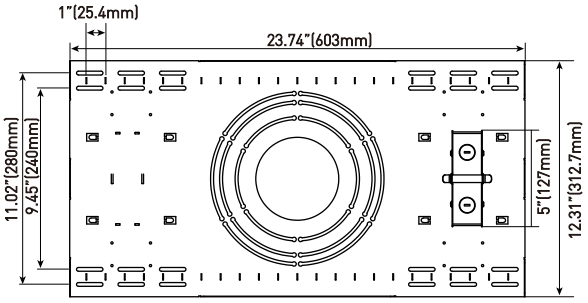

LED SION
LIGHTING

4/6/8/10 INCH New Construction Plate for Commercial Downlight Installation Instructions

DESCRIPTION

Fabricated from galvanized steel.
New construction mounting plate for 4/6/8/10-inch commercial downlights.

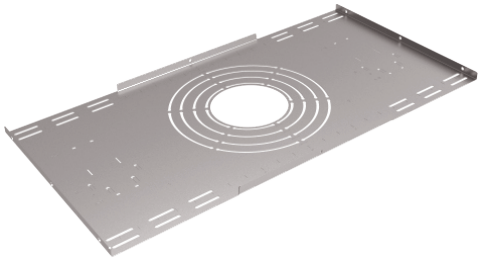

APPLICATION

Suitable for both new construction joist and T-grid installations.

PHYSICAL DIMENSIONS

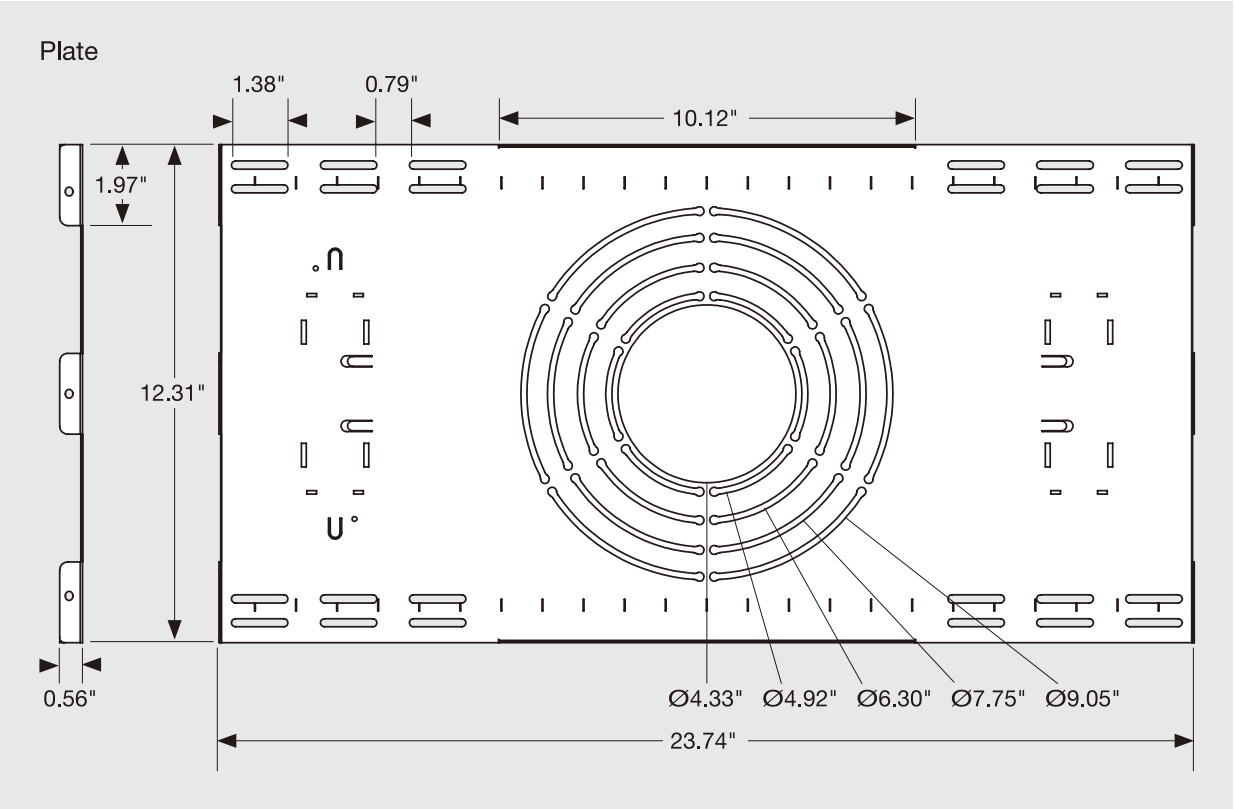

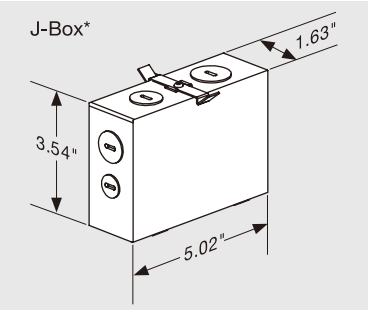

LIGHTING

4/6/8/10 INCH New Construction Plate for Commercial Downlight
Installation Instructions

Installation of Plate With Ceiling Joists

1. Align new-construction plate with ceiling joists (Fig. 1).

2. Secure plate to joists with appropriate screws (not included)(Fig. 2).

Note: Plate comes out of the box ready to be installed onto joists that have 12" or 16" spacing. To fit plate onto joists that have 24" spacing, simply bend down endtabs and screw to joists.

Fig. 1

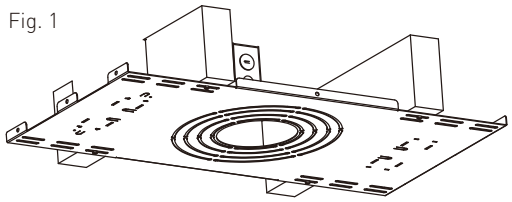

Fig. 2

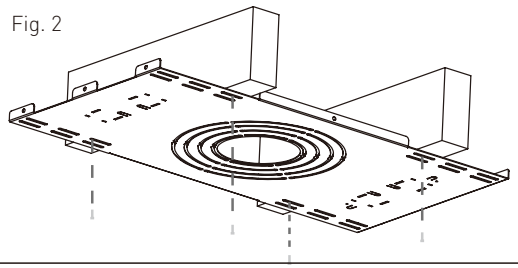

Installation of Plate With T-Grid

1.Lay new-construction plate into T-grid (Fig. 3).

2.Secure the plate to the T-grid using suitable screws (screws not included) (Fig. 4).

Fig. 3

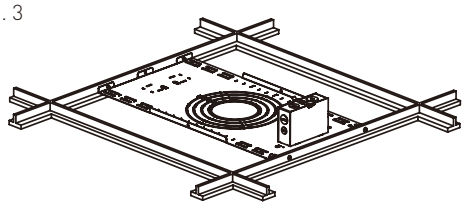

Fig. 4

