LED SION

Date:..... Location: .....

Product:..... Project:.....

Quantity:..... Catalog#.....

4X4" 20FT& 25FT Square Pole

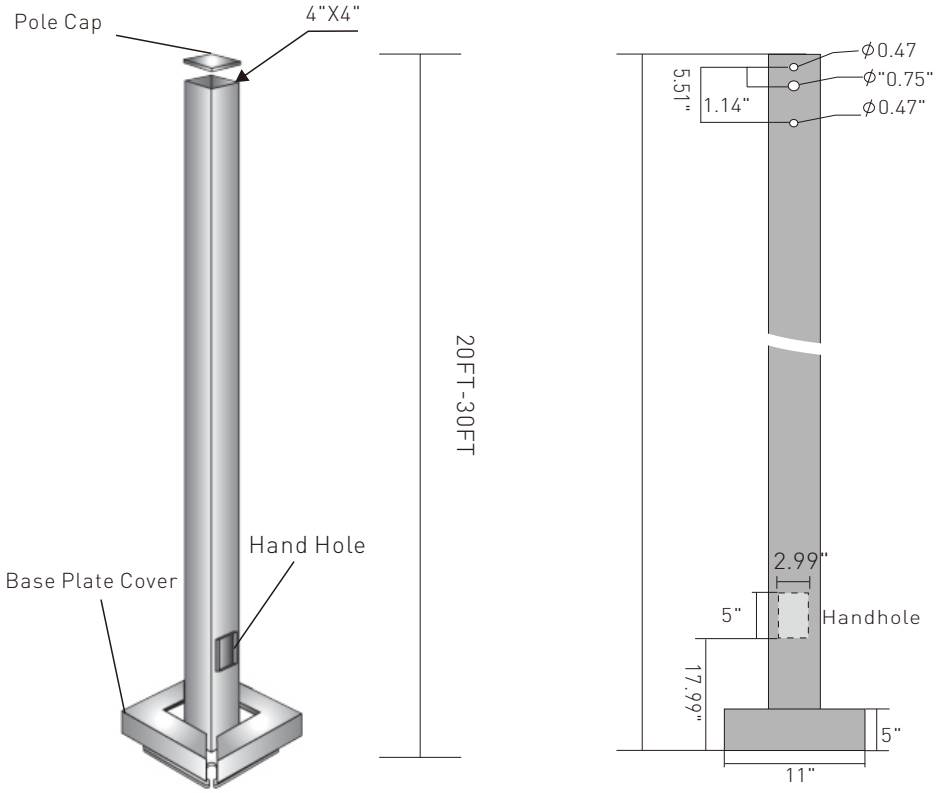

The Bronze/Black Straight Square Steel Poles are constructed from high-strength steel tubing. They can be side-drilled for arm-mounted area lighting luminaires, or equipped with tenon mounts for floodlights and post-top luminaires.
Typical area lighting applications include retail centers, industrial parks, schools and universities, public transit facilities, airports, office buildings, and medical facilities. Mounting heights from 10 to 30 feet are available, depending on the selected luminaire and specific application requirements.

Finish:

Textured architectural bronze powder coat finish, oven-baked to ensure maximum paint adhesion, hardness, and long-term durability.

Anchor Bolts:

Anchor bolts are included.

Hand Hole and Cover included::

Allows electricians to connect underground wiring to the power supply for the overhead light fixture.

Base Cover:

Poles come standard with a two-piece formed steel base cover, designed for easy assembly and installation over the pole base.

Pole Length:

Poles are available in standard lengths and can also be custom-cut to order. Please consult the factory for details.

4X4" 20FT& 25FT Square Pole

LIGHTING

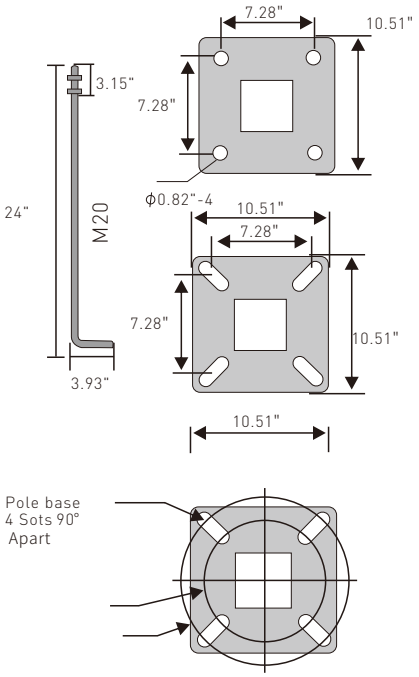

Template and Anchor bolts

Finish: Template bronze / black, anchor bolt Silver

Prior to installing the lamp pole, the mounting hook shall be embedded underground and secured with concrete. Once fixed, the lamp pole shall be fastened using locking screws, and the base assembly completed.

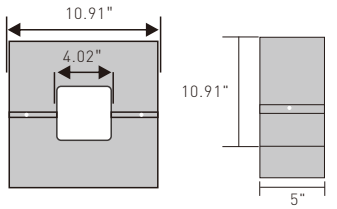

Base Cover

Finish: Bronze / Black

The 5" base shield is installed to protect the base after the lamp pole is secured, preventing damage to the pole base and extending the service life of the lamp pole.

Model No	Pole Dimensions			Base Plate	Anchor Bolts	
	Nominal Mounting Height	Wall Thick (ga)	Structural Weight (lb)	Bolt Circle Diameter (in)	Dia x Length x Hook (in)	Projection (in)
P20F4NSQ	20'	11	200	8.0 - 9.0	0.75 x 24.00 x 3.00	3.25 - 3.75

Model No	Pole Dimensions			Base Plate	Anchor Bolts	
	Nominal Mounting Height	Wall Thick (ga)	Structural Weight (lb)	Bolt Circle Diameter (in)	Dia x Length x Hook (in)	Projection (in)
P25F4NSQ	25'	11	225	8.0 - 9.0	0.75 x 24.00 x 3.00	3.25 - 3.75

20ft pole Maximum EPA with 1.3 Gust Factor (ft^2)					Pole weight (lbs)
80mph	90mph	100mph	110mph	120mph	
9.3	8.5	6.1	5.3	3.9	183

25ft pole Maximum EPA with 1.3 Gust Factor (ft^2)					Pole weight (lbs)
80mph	90mph	100mph	110mph	120mph	
4.5	2.3	1.9	1.1	0.7	220